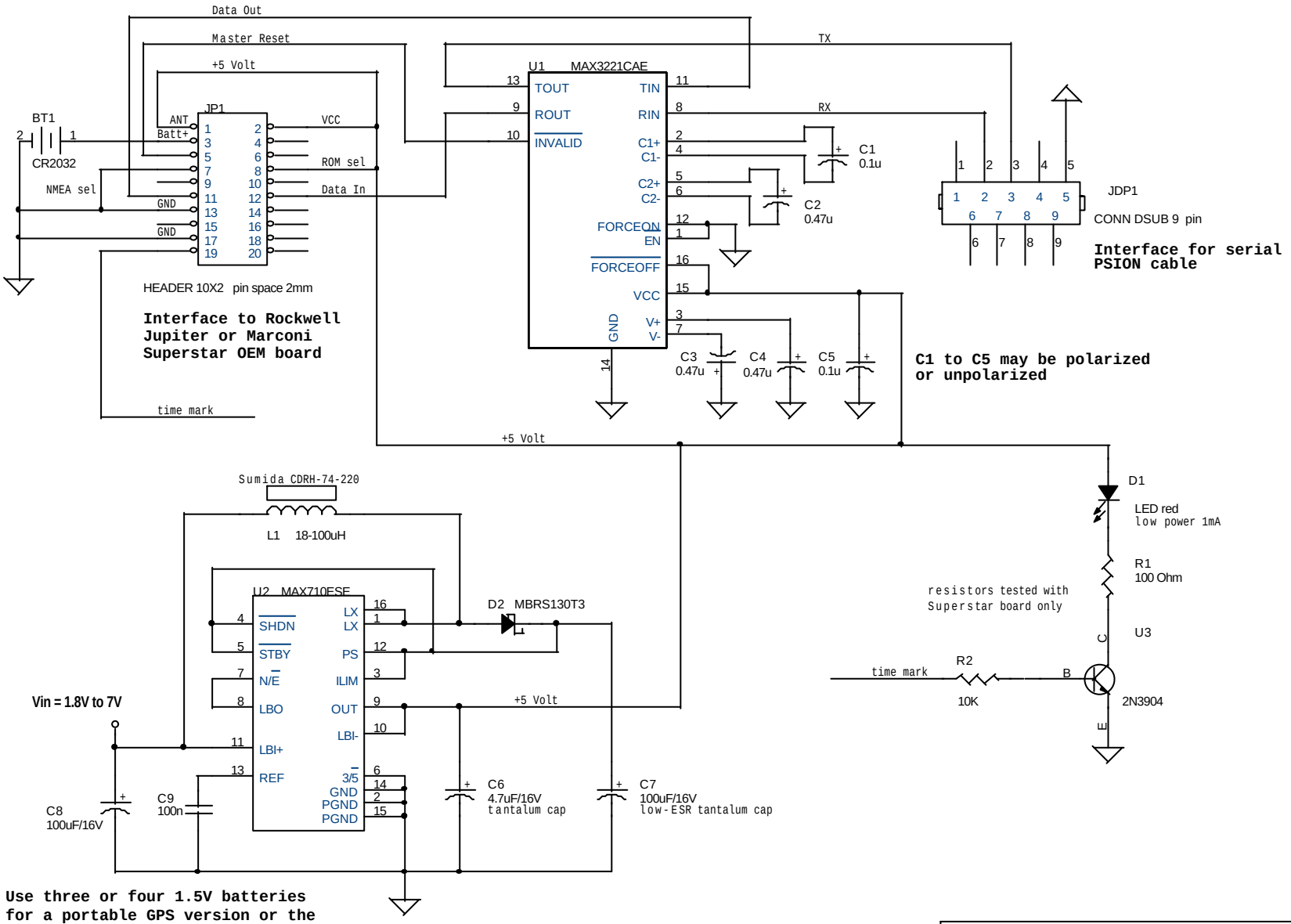

Title	GPS power supply and interface schematic	
Size A4	Document Number (C) Jan 2001 by Reiner Ziegler	Rev A
Date: Thursday, February 01, 2001	Sheet 1 of 1	